TVD-CB6

TruVision cup base (5 inch) for S6 motorized turret cameras. Use with TVD-SNB, TVD-PPB, TVD-CBW.

Overview

The TVD-CB6 cup base can be used on brackets TVD-SNB, TVD-PPB and TVD-CBW



Details

- Compatible with camera brackets TVD-SNB, TVD-PPB, TVD-CBW
- For use with S6 motorized turret cameras TVT-5608, TVT-5609, TVT-5610, TVT-5611

TVD-CB6

TruVision cup base (5 inch) for S6 motorized turret cameras. Use with TVD-SNB, TVD-PPB, TVD-CBW.

Technical specifications

General

Bracket type	Camera
Support type	TruVision mini domes
Bracket mounting part	Cup base
Mount type	Wall mount

Physical

Physical dimensions	Ø 136 mm Ø 5.35 in.
Colour	Grey (Pantone 428c)
Material	Aluminium

Environmental

Environment	Indoor, Outdoor

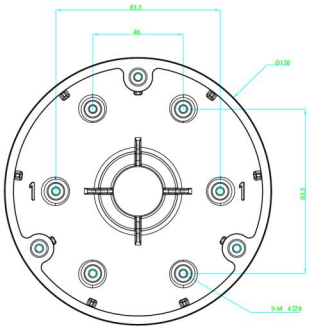

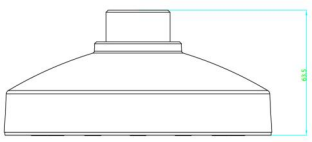

As a company of innovation, Kidde Global Solutions reserves the right to change product specifications without notice. For the latest product specifications, visit firesecurityproducts.com online or contact your sales representative.

Last updated on 7 September 2026 - 13:58