TVP-FM-01

TruVision flush mount bracket for M Series IP PTZ camera TVGP-M01-0402-PTZ-G

General

The TruVision flush mount bracket TVP-FM-01 can be used in combination with IP PTZ camera TVGP-M01-0402-PTZ-G.

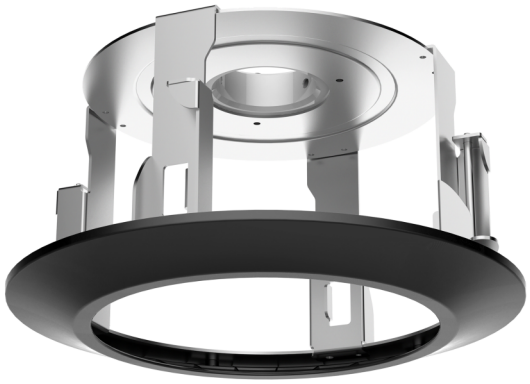

Details

- Steel and plastic with surface spray treatment
- In-ceiling mount

TVP-FM-01

TruVision flush mount bracket for M Series IP PTZ camera TVGP-M01-0402-PTZ-G

Technical specifications

General

Bracket type	Camera
Support type	PTZ camera
Bracket mounting part	Mounting bracket
Mount type	Recessed mount

Physical

Physical dimensions	Ø 233.1 × 138 mm Ø 9.18 × 5.43 in. Cut out size Ø 210 mm Ø 8.27 in.
Net weight	850 g 1.87 lb.
Colour	Black

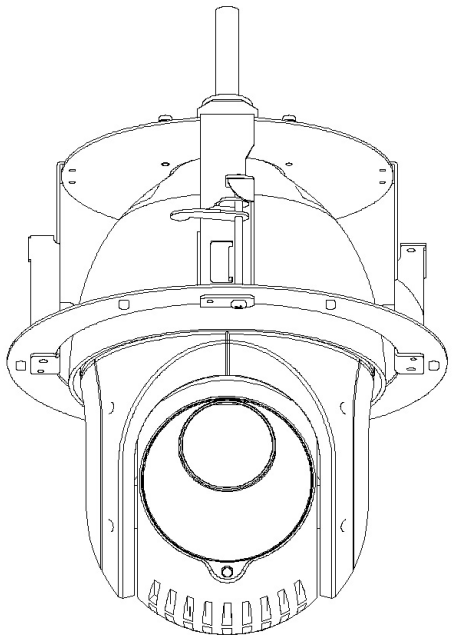

As a company of innovation, Kidde Global Solutions reserves the right to change product specifications without notice. For the latest product specifications, visit firesecurityproducts.com online or contact your sales representative.

Last updated on 28 August 2026 - 11:23