07127-00

Adjustable mounting bracket

General

The 07127-00 is an adjustable mounting bracket for use with FF700 series flame detectors. The mount allows the detector to be horizontally adjustable by up to 45°, and adjustable by up to 45° downwards.

The bracket is corrosion resistant an offers a high resistance to pitting and crevice corrosion in chloride environments.

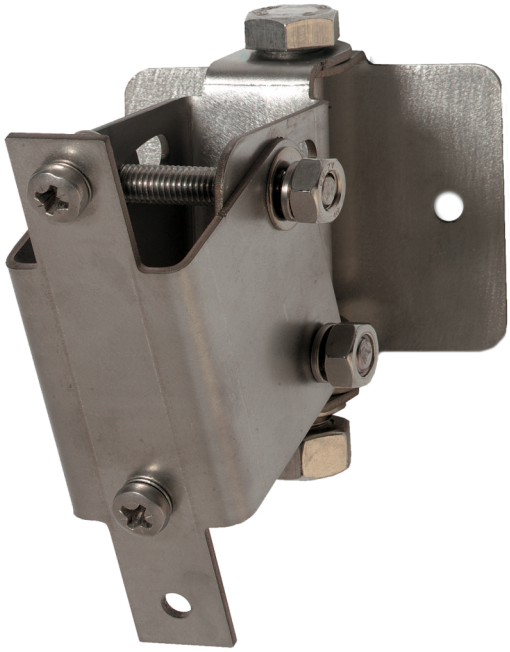

Details

- Fully compatible with FF700 series flame detectors for easy installation
- Can be mounted on walls or unistruts

07127-00
Adjustable mounting bracket

Technical specifications

General

Compatibility	FF700 Series flame detectors

Physical

Net weight	700 g
Mounting type	Screw / bolt mount
Material (body)	Stainless steel

Environmental

Vandal proof	Yes
Environment	Exd, Indoor, IS, Outdoor

Compatible products

Category	Reference	Description
Detection device	FF742N	16581 Dual IR Flame Detector In Die-Cast Zinc Alloy Housing
Detection device	FF746N	16511 Dual IR Flame Detector In Eexd - IIC T6 Flame Proof Housing
Detection device	FF747N	16571 Dual IR Intrinsic Safe Flame Detector In Die-Cast Zinc Alloy Housing
Detection device	FF751N	16591 UV / Dual IR Flame Detector In Die Cast Zinc Alloy Housing
Detection device	FF756N	16521 UV/IR² Flame Detector in Eexd - IIC T6 Flame Proof Housing
Detection device	FF762N	16589 Triple IR Flame Detector In Die-Cast Zinc Alloy Housing
Detection device	FF766N	16519 Triple IR Flame Detector In Eexd - IIC T6 Flame Proof Housing
Detection device	FF767N	16579 Triple IR Intrinsic Safe Flame Detector In Die-Cast Zinc Alloy Housing
Mounting Accessories	12545-00	Weather Shield (Stainless Steel)

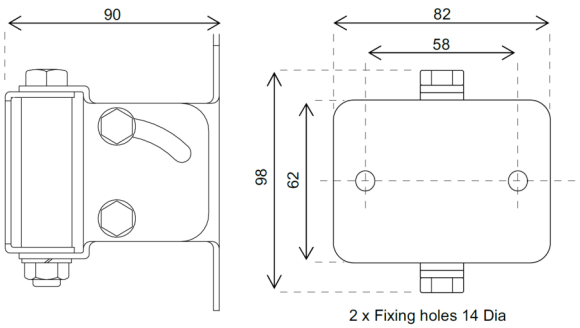

EDWARDS
Built for Resilience

As a company of innovation, Kidde Global Solutions reserves the right to change product specifications without notice. For the latest product specifications, visit firesecurityproducts.com online or contact your sales representative.

Last updated on 27 July 2026 - 10:51