# KE-AS3115R-CM

## Avvisatore ottico/acustico VAD indirizzato serie Excellence con isolatore, montaggio a soffitto, corpo rosso

### General

The innovative Excellence range of intelligent addressable devices offers advanced features for reliability and peace of mind. Coupled with features for ease of installation and maintenance on new fire detection systems, it's a perfect match for exceptional overall performance.

The KE-AS3115R-CM is a RED bodied, ceiling mount sounder & visual alarm device (VAD) with integrated isolation for Excellence series fire systems. They are connected over a 2-wire loop and are loop powered. They are compatible with automatic synchronisation controlled from the CIE (control panel).

### Installation

For ease of system planning, Excellence notification devices share a first fix base with Excellence point detectors. This allows for standardised cabling with less cabling issues, and allows devices to be interchanged without rewiring should requirements change. Optional installation accessories to support surface conduit entry, trim skirts address tags and address labels are available to suit multiple applications.

To assist with the installation and commissioning process, a multitude of features ensure that the device is easily and properly inserted into the base, securely connected to the loop and that it functions perfectly. Local multi-coloured LED indicators help visualise any problems locally without requiring access to the fire panel.

### Configuration & Operation

All functional programming is controlled from the CIE and can be changed on the fly without access to the device.

Should the loop be heavily loaded, all Excellence notification devices offer a unique "Battery assisted activation" feature allowing the device to draw its activation power from 3 x CR123 batteries that may be optionally fitted to the device. Using batteries protects the device loop from possible overload which may put the system at risk, and allows for as many as 128 notification devices to be fitted to any Excellence loop. When batteries are used they are automatically supervised buy the device, with ample warning time when batteries require replacing. Under standard operating conditions batteries should provide more than 5 years of support without requiring replacement.

### Safety & Security

Automatic daily self testing ensures that when the device is activated, everything works as expected. Pre-activation self testing ensures that a warning is raised before an event takes place, minimising the risk when notification is required. With the integrated isolator, continuity of operation is ensured even with a single short circuit on the loop.




### Dettagli

- Base di fissaggio standard condivisa con rivelatori puntiformi serie Excellence
- Isolatore integrato di cortocircuito garantisce il funzionamento in caso di un singolo corto sul loop
- Funzione di blocco dispositivo, targhetta per indirizzo e supporto base alta
- Alimentazione da loop e supporto attivazione assistita da batteria che permette di avere sino 128 dispositivi di notifica collegabili sul loop
- Supporta 32 toni di allarme a 4 livelli di allarme configurabili dalla centrale di rivelazione incendio
- 3 livelli di illuminamento VAD impostabili dalla centrale incendio
- Supporto la segnalazione dell'evacuazione in fasi per una flessibilità applicativa
- Test automatico pre e post attivazione per garantire la massima sicurezza
- Sincronizzazione automatica
- Indicatore LED a tre colori per la diagnostica stato per una rapida messa in servizio e ricerca dei guasti

# KE-AS3115R-CM

## Avvisatore ottico/acustico VAD indirizzato serie Excellence con isolatore, montaggio a soffitto, corpo rosso

## Specifiche tecniche

### General

| | |
|---|---|
| Addressing method | DIL switch |
| Monitoring | Activated, Battery level, Continuously self-checking, Fault, Open circuit, Short circuit |

### Electrical

| | |
|---|---|
| Power supply type | Batteries, Loop powered |

### Isolation

| | |
|---|---|
| Type | Negative line break |

### Physical

| | |
|---|---|
| Colour | Red (RAL 3001) |
| Mounting type | Ceiling mount |
| Mounting position | Ceiling |
| Mounting base | Shallow |
| Material | PC / ABS |
| Texture | Smooth |

### Environmental

| | |
|---|---|
| Vandal proof | No |
| Environment | Indoor |

### Regulatory

| | |
|---|---|
| Compliancy | CE, REACH, RoHS 3, WEEE |
| Certification | CPR |

### Prodotti compatibili

| Categoria | Riferimento | Descrizione |
|---|---|---|
| Detection device | KE-ASA-AUXR | Base alta dispositivo di notifica Excellence (rossa) |
| Detection device | KE-DB3010W | Base standard per rivelatori serie Excellence |

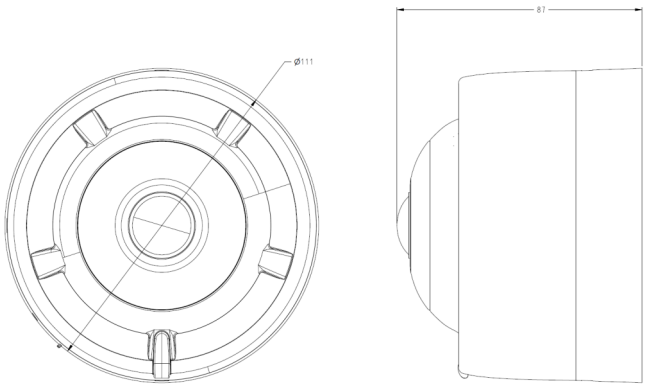


In quanto azienda in continua innovazione, Kidde Global Solutions si riserva il diritto di modificare le specifiche del prodotto senza preavviso. Per avere informazioni sempre aggiornate, visita it.firesecurityproducts.com online o contatta il tuo riferimento commerciale.

Last updated on 12 November 2026 - 18:57