KIDDE™ COMMERCIAL

# ZX832-3P

**ZP7 Series Addressable Multisensor (Optical/heat)**



# ZX832-3P

## ZP7 Series Addressable Multisensor (Optical/heat)

## Spécifications techniques

### General

| | |
|---|---|
| Addressing method | Interruptores DIP |

### Electrical

| | |
|---|---|
| Power supply type | Alimentado por bucle |

### Physical

| | |
|---|---|
| Colour | Señal blanca (RAL 9003) |
| Mounting type | Montaje sobre base, Deckenmontage, Versenkte Montage |
| Material (body) | Geformtes ABS |

### Environmental

| | |
|---|---|
| Vandal proof | No |
| Environment | Drinnen |

### Regulatory

| | |
|---|---|
| Compliancy | CE, REACH, RoHS 3, WEEE |
| Certification | CPR |

### Produits compatibles

| Catégorie | Référence | Description |
|---|---|---|
| Detection device | 11510-ZT | ZPL1-1 ADD.LABEL 1001-1127 |
| Detection device | 11520 | Zpl1-2 Add.Label 2001-2127 |
| Detection device | 11530-ZT | ZPL1-3 ADD.LABEL 3001-3127 |
| Detection device | 11540-ZT | ZPL1-4 ADD.LABEL 4001-4127 |
| Detection device | ZP7-IB2-P | Ziton series point detector base with isolator |
| Detection device | ZP7-RB1-P | Recess Mount Detector Base (Polar White) |
| Detection device | ZP7-SB1-P | Surface Mount Detector Base (Polar White) |
| Notification device | 122301 | Z-RL3 Remote LED w/ "Fire" Text, Square |
| Notification device | Z-RL4 | Remote LED Indicator - Square |

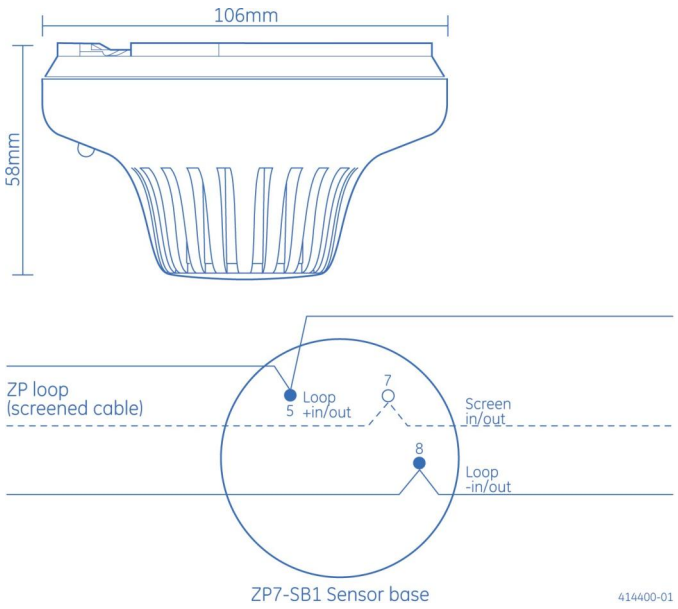


KIDDE COMMERCIAL

En tant que société d'innovation, Kidde Global Solutions se réserve le droit de modifier les spécifications des produits sans préavis. Pour les dernières spécifications du produit, visitez le site web be.firesecurityproducts.com ou contactez votre représentant commercial.

Last updated on 12 November 2026 - 18:57