S40-2MLC

10G SFP Transceiver Module (850nm) - up to 300m - Multimode

Overview

The IFS family of Small Form-factor Pluggable (SFP) Transceiver Modules are designed for high performance integrated duplex data transmission over optical fiber. These SFP transceiver modules are compliant with the industry's SFP Multi-source Agreement (MSA) standard.

The IFS SFP Transceiver Modules offer the ability to enable the SFP ports on any Ethernet equipment that have a built-in SFP Mini-GBIC interface. These modules are hot-swappable without any interruption of the host equipment operation.

These SFP modules are available in 100Base-FX/BX or 1000Base-TP/FX/BX confi gurations allowing for use of either one fi ber or two fi ber transmission over single mode or multi-mode optical fi ber. The 10 Gigabit SFP+ modules
are available for single mode and multi-mode fi ber for use in IFS switches that support 10G SFP+ slots for highbandwidth switch trunking and communication links.

Additionally, certain SFPs are available as wide-temperature versions for use in industrial equipment deployed in harsh environments.



Details

- SFP multi-source agreement compliant
- 10G optical uplink
- Max 300m distance based on 50 / 125 (OM3) fiber
- Class 1 laser safety standard IEC 60825 compliant
- LC duplex receptacle
- Low power dissipation
- Plug-and-play capability for easy installation
- Hot Pluggable
- 0ºC to +70ºC operation temperature
- TTL signal detect indicator
- Single power supply 3.3V

S40-2MLC

10G SFP Transceiver Module (850nm) - up to 300m - Multimode

Technische specificaties

General

Category	SFP
Port type	Multi Tilstand
No. of fibers	2
Port speed	10G
Wavelength	850 nm
Maximum distance	300 m

Environmental

Operating temperature	0 to 70°C
Storage temperature	-40 to 85°C
Relative humidity	5 to 95% (non-condensing)

Regulatory

Compliancy	CE, FCC

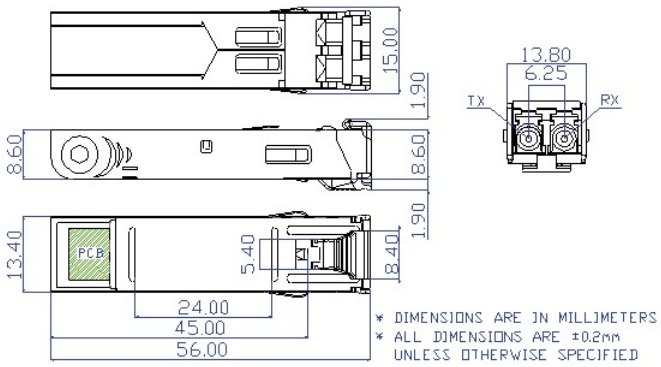

Als een bedrijf van innovatie behoudt Kidde Global Solutions zich het recht voor productspecificaties zonder kennisgeving te wijzigen. Ga voor de nieuwste productspecificaties online naar nl.firesecurityproducts.com of neem contact op met uw verkoopvertegenwoordiger.

Last updated on 12 November 2026 - 20:20