# DC104

## Contacto Magnético Balanceado Montagem Superfície - GAP: 1.5cm - 3.1cm, terminais parafuso

### Easy Installation

The DC102-series are ideal for residential and commercial applications where terminal connections are preferred. The unit features positive clamping terminals with anti-rotation lugs and captured screws with combination heads. These features allow for easy, quick installations.

### Comprehensive Range

The range includes wide gap, SPDT and biased versions for higher security. This makes it one of the most popular contacts available in the industry today.

### Durability and dependability

These high performance magnetic contacts have been designed to facilitate installation and ensure durability and dependability. Most are conservatively rated at 10,000,000 cycles, guaranteeing a long life. Every reed connection is hand soldered and each magnetic contact is tested before they leave the factory.

### High quality components and materials

Reed legs are plated with rhodium or ruthenium, and hermetically sealed in dry nitrogen. This offers superior protection against sticking and provides a moisture free environment therefore preventing corrosion.




### Detalhes

- Ideal for residential and commercial
- Convenient surface mounting
- Versions with built-in resistors available

# DC104

## Contacto Magnético Balanceado Montagem Superfície - GAP: 1.5cm - 3.1cm, terminais parafuso

## Especificações técnicas

### General

| | |
|---|---|
| Application type | Montaje en Superficie |
| Contact type | CO |

### Wired/wireless

| | |
|---|---|
| Wired-wireless | Verdrahtet |

### Physical

| | |
|---|---|
| Colour | Weiß |

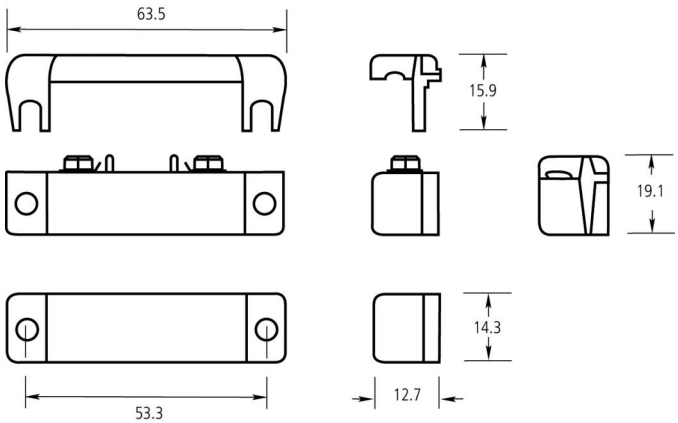


Como empresa de inovação, a Kidde Global Solutions reserva o direito de alterar as especificações do produto sem aviso prévio. Para obter informações sobre as especificações mais recentes do produto, visite pt.firesecurityproducts.com online ou contate o departamento comercial.

Last updated on 12 November 2026 - 18:57