KIDDE™ COMMERCIAL

# ZP730-2P

**ZP7 Series Addressable Optical Detector**



# ZP730-2P

## ZP7 Series Addressable Optical Detector

## Tekniske specifikationer

### General

| | |
|---|---|
| Addressing method | Switches DIP |

### Electrical

| | |
|---|---|
| Power supply type | Alimenté en boucle |

### Physical

| | |
|---|---|
| Colour | Signal blanc (RAL 9003) |
| Mounting type | Assemblage sur socle |
| Material (body) | Støbt ABS |

### Environmental

| | |
|---|---|
| Vandal proof | No |
| Environment | Indendør |

### Regulatory

| | |
|---|---|
| Compliancy | CE, REACH, RoHS 3, WEEE |
| Certification | CPR |

### Kompatible produkter

| Kategori | Reference | Beskrivelse |
|---|---|---|
| Detection device | 11510-ZT | ZPL1-1 ADD.LABEL 1001-1127 |
| Detection device | 11520 | Zpl1-2 Add.Label 2001-2127 |
| Detection device | 11530-ZT | ZPL1-3 ADD.LABEL 3001-3127 |
| Detection device | 11540-ZT | ZPL1-4 ADD.LABEL 4001-4127 |
| Detection device | ZP7-IB2-P | Ziton series point detector base with isolator |
| Detection device | ZP7-RB1-P | Recess Mount Detector Base (Polar White) |
| Detection device | ZP7-SB1-P | Surface Mount Detector Base (Polar White) |
| Notification device | 122301 | Z-RL3 Remote LED w/ "Fire" Text, Square |
| Notification device | Z-RL4 | Remote LED Indicator - Square |

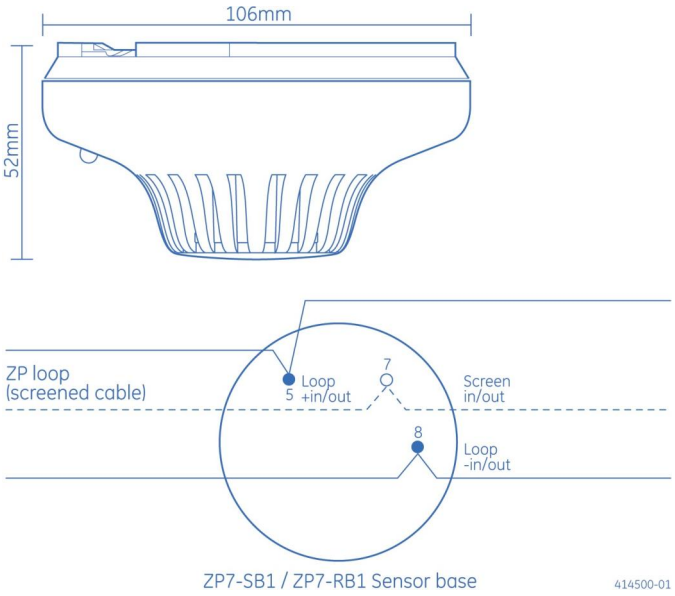


KIDDE COMMERCIAL

Kidde Global Solutions er et innovativt selskab og forbeholder sig ret til at ændre produktspecifikationer uden varsel. De nyeste produktspecifikationer kan du finde på dk.firesecurityproducts.com eller ved at kontakte din salgsrepræsentant hos.

Last updated on 12 November 2026 - 18:57