ZP730-2P

Ziton series addressable optical detector

Reliable sensing for most fire alarm applications

Designed for early response to slow burning, smoldering fires, the ZP730-2P is a Polar White, addressable smoke detector developed to provide reliable sensing for most fire alarm applications. The detector's proven stability in air movement associated with air conditioning systems has made it a popular selection for modern building interiors.

Operating on light scatter principles, the ZP730-2 fully meets the sensitivity requirements of EN54-7 and is approved by several international approval bodies.

Automatic self test

False and unwanted alarms are virtually eliminated - smoke levels are continuously sensed by the unit and transmitted via the ZP wiring loop as electronic signals. These are assessed and verified by the control panel prior to any alarm decision being taken.

Installed as part of a ZP addressable system, up to 127 sensing devices may be connected to each of the control panel loops. All loop devices incorporate switch settings enabling them to be assigned a unique address that is polled by the panel every two seconds.

Sensor sensitivity, calibration and self-test are carried out automatically by the ZP system. Removal or replacement of an incorrect sensing device will be identified by the system and shown as a fault. Sophisticated auto contamination adjustment compensates for any drift in performance due to dirt in the sensing chamber.

Locking base option

For ease of removal sensors plug into a range of base units by a simple twist and lock action. A site selectable option is provided to lock the sensor into its base. Once applied the unit can only be removed by means of a special tool.

A red LED indicator situated on the sensor molding flashes to indicate when the unit is in alarm. Space for address labels is provided on sensor and base moldings, ensuring units are replaced in their correct location and address numbers can be identified from floor level.



Details

- Responds to slow burning fires
- EN54-7 and CPR certified
- Analogue sensing - reduces false and unwanted alarms
- Addressable - system knows the status and location of every sensor
- Alarm verification, self test, auto contamination adjustment

ZP730-2P

Ziton series addressable optical detector

Technical specifications

General

Status indication	Alarm LED (red)
Compatibility	ZP7 addressable systems
Addressing method	Switches DIP

Electrical

Power supply type	Alimenté en boucle
Operating voltage	19.5 to 20.5 V 4 V (max. line loss)
Current consumption	<600 µA (quiescent) <700 µA (active)

Detection

Detection principle	Photo electric light scatter
Sensitivity	Configurable (1.6%, 2.3%, 3.0%, 3.6% obs/m)
Coverage area	100 m²

Output

Output quantity	1
Output type and rating	Remote indicator
Programmable	No
Remote alarm output	Yes

Physical

Physical dimensions	106 x 52 mm (Ø x H)
Net weight	105 g (excluding base)
Colour	Signal blanc (RAL 9003)
Mounting type	Assemblage sur socle
Material (body)	Støbt ABS

Environmental

Vandal proof	No
Operating temperature	-10 to +75°C
Storage temperature	-20 to +70°C
Relative humidity	20 to 95% noncondensing
Environment	Indendør
IP rating	IP32

Regulatory

Compliancy	CE, REACH, RoHS 3, WEEE
Certification	CPR
Standards	EN54-7
Environmental	EEC89/336

Compatible products

Category	Reference	Description
Detection device	11510-ZT	ZPL1-1 address label 1001-1127
Detection device	11520	ZPL1-2 Add.Label 2001-2127
Detection device	11530-ZT	ZPL1-3 address label 3001-3127
Detection device	11540-ZT	ZPL1-4 address label 4001-4127
Detection device	ZP7-IB2-P	Ziton series point detector base with isolator
Detection device	ZP7-RB1-P	ZP7 Series point detector recess mount base
Detection device	ZP7-SB1-P	ZP7 Series point detector base
Notification device	122301	Z-RL3 Remote LED w/ "Fire" Text, Square
Notification device	Z-RL4	Remote LED Indicator - Square

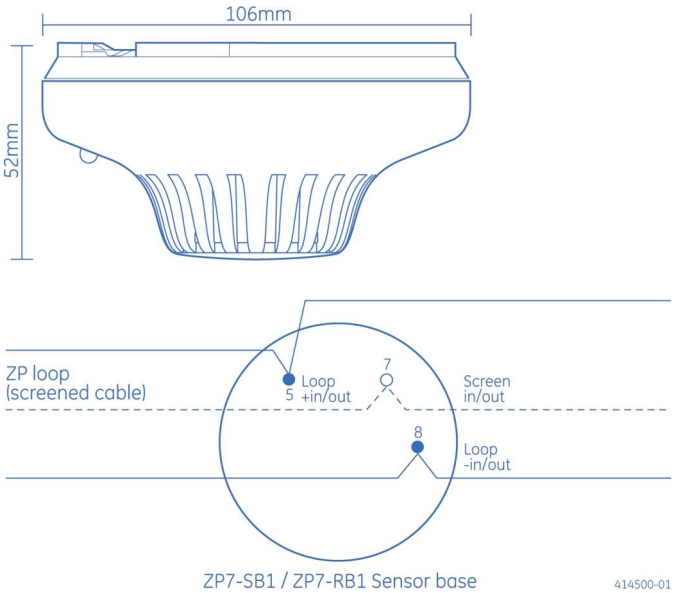

KIDDE COMMERCIAL

As a company of innovation, Kidde Global Solutions reserves the right to change product specifications without notice. For the latest product specifications, visit firesecurityproducts.com online or contact your sales representative.

Last updated on 16 October 2026 - 11:24