DC113

Recessed roller plunger contact

Roller Plunger Recessed Contact

The DC113 roller plunger contact saves installation time while providing reliable security of a magnetic contact. Drill only one hole to mount the DC113 roller plunger. The entire magnetic contact is housed in an economical single unit. Recessed mounting hides the contact within the frame of the door it protects.

Reliable Functioning

GE's roller plunger wheel is designed to operate with a smaller surface area in contact with the door. This reduces the likelihood that dirt and other debris will clog the mechanism. The specially designed ABS plastic housing protects the roller wheel from pressure exerted by swelling wood that could cause ball plungers to jam in place.

Applications

Use the DC113 to protect a variety of doors and windows. It can also be used to protect high-value objects on display, such as antiques, books or works of art by placing the object on the recessed contact.



Details

- Ideal for residential doors
- Works as plunger or ball switch
- Flanges for reliable, positive retention
- Spacers, mounting screws included

DC113

Recessed roller plunger contact

Technical specifications

General

Application type	Montage encastré
Contact type	NC
Connectivity	4 wires, 2 m

Wired/wireless

Wired-wireless	Kablede

Physical

Dimensions contact / sensor	19 x 44 mm (Ø x L)
Colour	Beige

Regulatory

Certification	INCERT
Standards	VSO

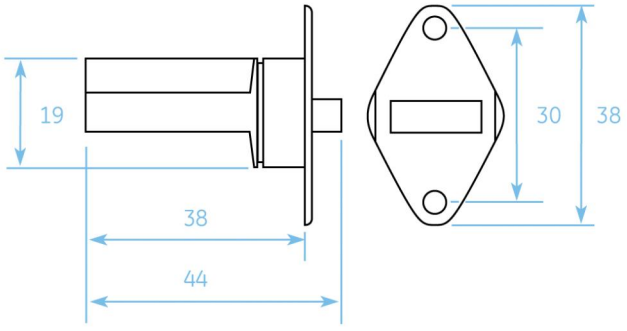

As a company of innovation, Kidde Global Solutions reserves the right to change product specifications without notice. For the latest product specifications, visit firesecurityproducts.com online or contact your sales representative.

Last updated on 13 August 2026 - 11:05